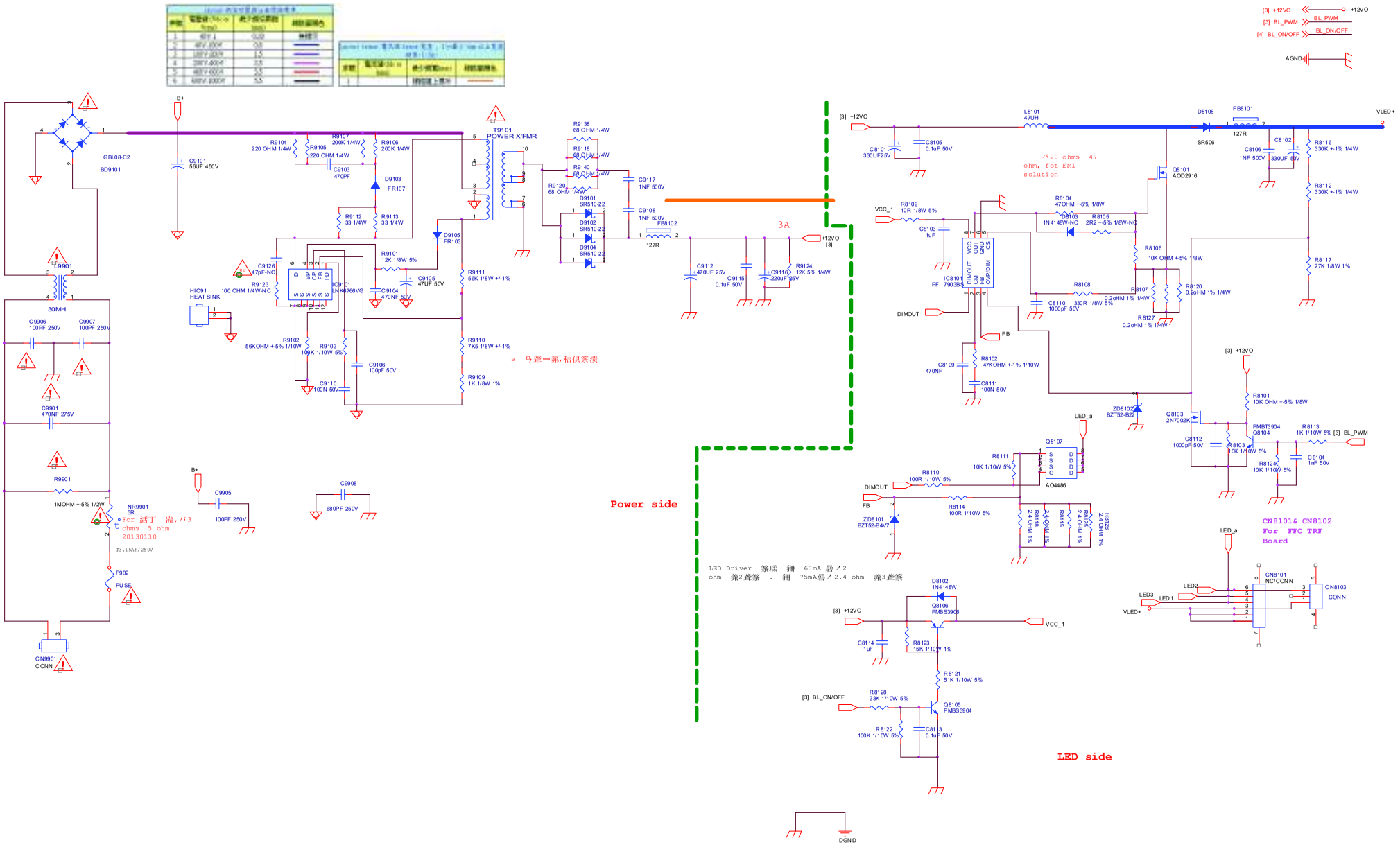

<Variant Name>

TPV (Top Victory Electronics Co., Ltd.)		OEM MODEL		Size	Custom
結隔压銀鹿		TPV MODEL		Rev	
Key Component	12. AC POWER	PCB NAME		称	
Date	Wednesday, December 18, 2013	Sheet	11 of 11		